A Grid for process control

Fabrice Sabatier, Supélec, Fabrice.Sabatier@metz.supelec.fr
Amelia De Vivo, Universita di Salerno, amedev@unisa.it
Stéphane Vialle, Supélec, Stephane.Vialle@supelec.fr

Action **C**oncertée **I**ncitative [**ACI**]
Globalisation des **R**essources **I**nformatiques
et des **D**onnées [**GRID**]

Long term goals / Why to use a Grid for process control ?

- To connect a physical process to “computing power” like to electrical power !

- Physical processes are installed where they are needed:
  - can be far of computing centers,
  - can be in computer hostile environment,
  - can be far of computer maintenance people,
  - ….

- Embedded large computing power can be:
  - too much power consuming
  - too much expensive
  - too constraining for the physical process mission

Long term goals / Why to use a Grid for process control ?

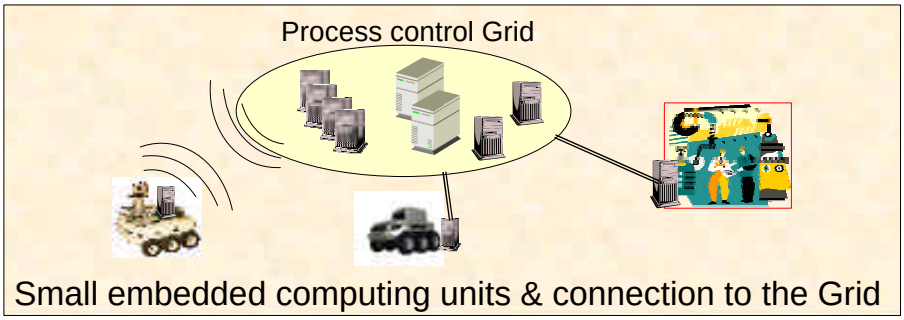

Small embedded computing units & connection to the Grid

- Access to:
  - large computing power
  - redundant computing (for fault tolerance)
  - remote control and maintenance
  - up to date process control libraries (grid services)
  - unlimited history saving mechanisms

A Grid for process control

Project Road Map

"Step by Step" integrated project

Incremental development and deployment with frequent performance measurements

Approximate road map

Phase 1 – 2002-2003:

- P2P connection France-Italy across “ssh-link”
- Experiment remote control across Internet
  (robot server + client applications)
- Performance measurements
- Optimization of the robot control algorithms
  (serial optimization, multitreading, hyperthreading, MPI, computation-communication-mechanical move overlapping)

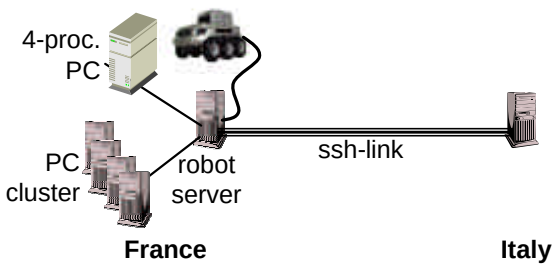

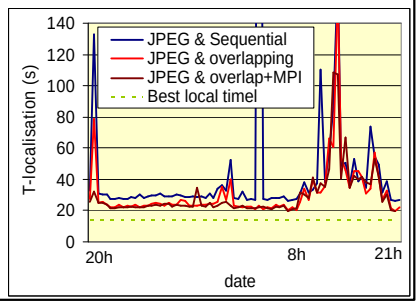

Approximate road map

Phase 2 – 2003-2004:

- Deployment of a light Grid environment across Internet
  (Internet/**VPN/Corba**/GridRPC)
- High-level services implement complex robot commands
- Low-level services support redundant and concurrent calls
- User friendly API development
- Grid service semantic definition (beginning)
- Performance measurements
- Fault tolerance experiment and achievement

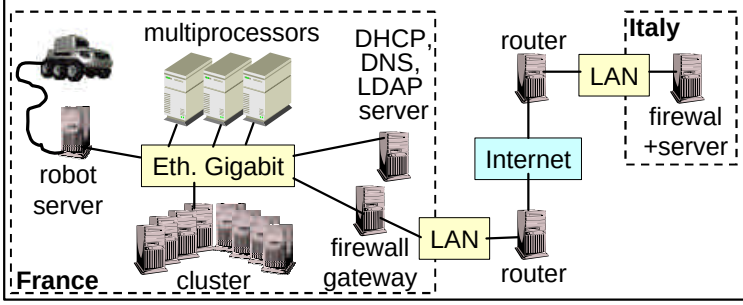

Grid soft. architecture

Application
RobGrid API
DIET-GridRPC
CORBA
VPN-IPSEC
Int/Ethernet

Approximate road map

Phase 3 – 2004-2005:

- Extension of the Grid (still VPN based):
  - more sites, with different “internet distances”
  - several physical processes to control
- Redundancy management policy & Redundancy manager Grid services
- Improvement of socket comm.: TCP → UDT (?)
- Performance measurements

new devices

Hercule

Approximate road map

Phase 4 – 2004-?:

- Deployment of a **Globus based** Grid environment
- Grid service portage: VPN/Corba/GridRPC → “Globus/XXX”
- API improvement: RobGrid API → ProCtrlGrid API
- Monitoring and accounting
- Performance measurements

Electrical power
(electrical grid)

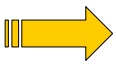

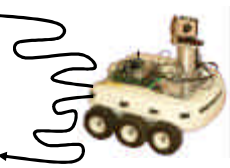

Computing power
(process control grid)

Details on phase 2

2003-2004

Using DIET on a VPN
Real deployment across France and Italy

Phase 2

Short term goals

- To support special applications needing extra CPU
- To efficiently process embarrassingly parallel applications

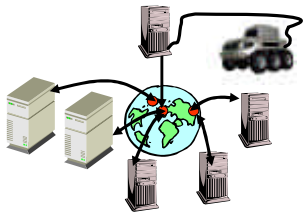

- To dynamically switch to unloaded machines, avoiding to devot machines
- To be fault tolerant

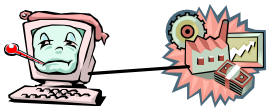

- To share our robotic system with our (distant) partners

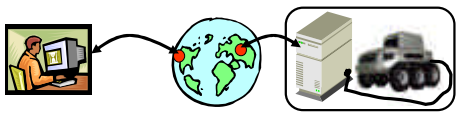

Phase 2

Robot & Grid testbed

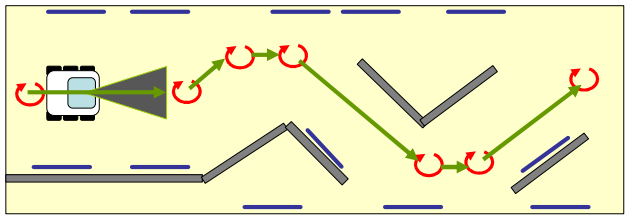

Robotic environment

Grid of computing resources

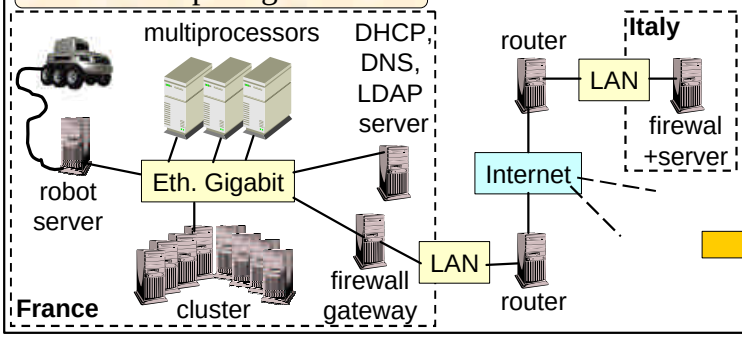

Grid middleware

Application
RobGrid API
DIET-GridRPC
CORBA
VPN-IPSEC
Int/Ethernet

Phase 2

Software Grid Architecture

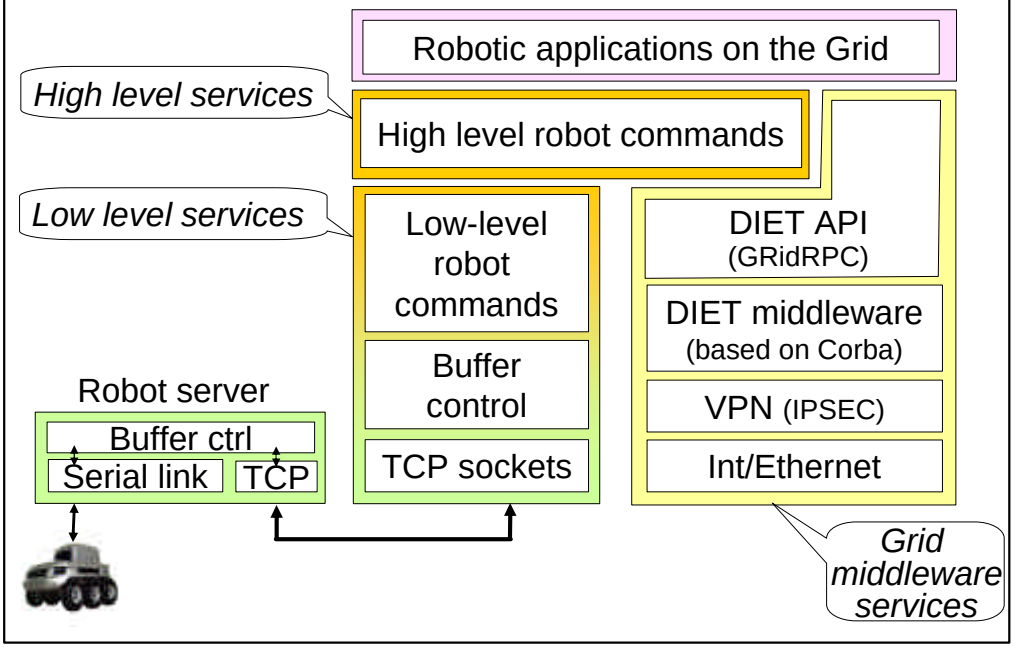

Phase 2

Secure VPN

IPSEC based

Needs :

- Port UDP-500 to be opened
- Protocols ESP (50) and AH (51) to be authorized
- Firewall: to reject msg from PCs without VPN certificate
- Gateway:
  - to establish authenticated connections
  - to encapsulate TCP msg in ESP msg

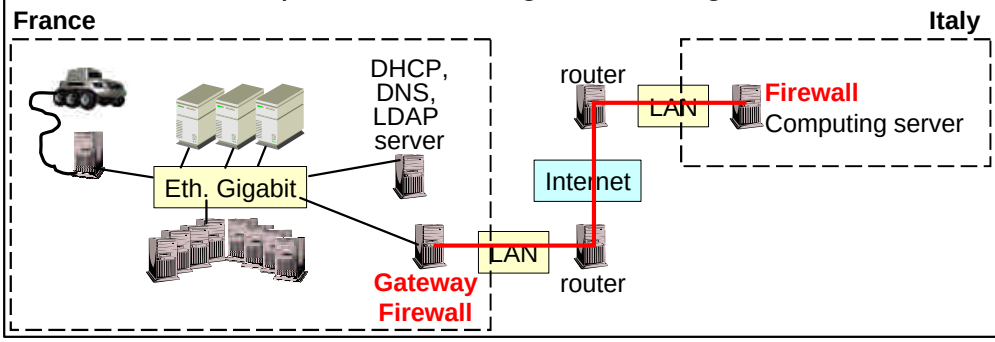

Phase 2

Grid deployment & Chain of services

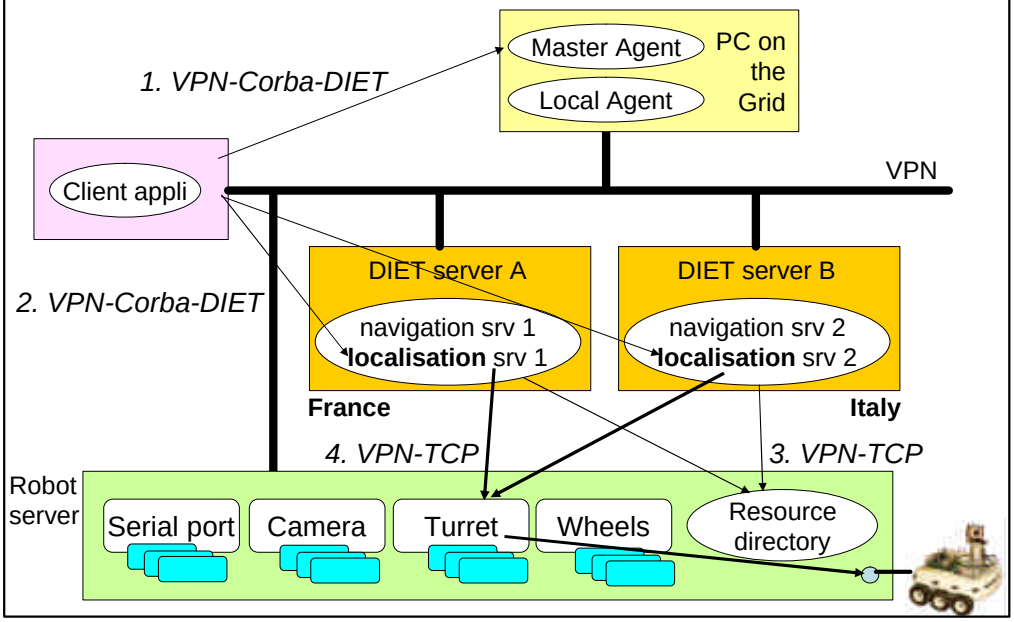

Phase 2

High Level Grid Interface: RobGrid

RobGrid main features:

- C++ library, based on GridRPC
- Client objects for easy access to high level Grid services
- Manages redundant calls to high level Grid services
- Hides communication initializations with any service

Robotic applications on the Grid

High level Grid services

(localization, navigation, lightness, …)

High level DIET interface

(Session, LocClient, NavClient, …)

Low level robot services

DIET & Grid middleware services

Phase 2

High Level Grid Interface: RobGrid

Programming new high level Grid services:

Need a high-level Grid service for robot control ?

Look at RobGrid library

Implement **quickly** a new one (calling RobGrid internal objects)

One high level Grid service = a set 4 of sub-services:

- **Connection** to the related service of the robot server
- **Reset** of the result **buffers** on the robot server
- **Robotic operation** (ex: navigation, localization, …)
- **Disconnection** from the robot server

Phase 2

High Level Grid Interface: RobGrid

Adding a new high level Grid service for robot control:

```
loc->Call();
Res = loc->GetResult();

Nav->AsyncCall(x,y,theta);
While(!nav->Probe()) {
        light->Call();
        ...
}
loc->Call();
Res = loc->GetResult();
```

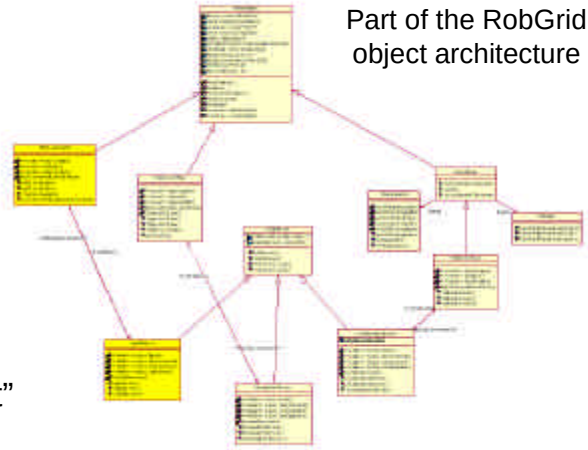

Part of the RobGrid object architecture

"Lightness measurement" Service has been:

- quickly developed
- quickly included in the Grid

Phase 2

High Level Grid Interface: RobGrid

Application code example:

```
Session *session = new Session();
NavClient *nav = new NavClient(2);
LightClient *light = new LightClient(1);
LocClient *loc = new LocClient(2);
```

```
Session->Start();
loc->Connect();
nav->Connect();
light->Connect();

nav->AsyncCall(x,y,theta);
while(!nav->Probe()) {
   light->Call();
   …
}
loc->Call();
Res = loc->GetResult();
…
```

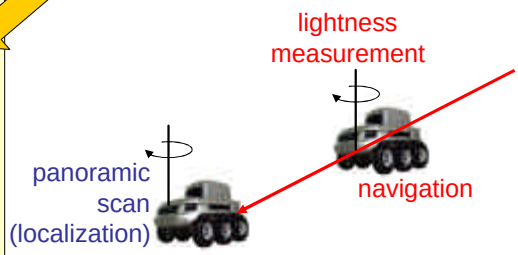


```
delete loc;
delete nav;
delete light;
delete session;
```

Phase 2

Performance measurement

Benchmark of localization routine on the Supelec sub-Grid:

- Frequently called (strongly optimized)
- **Local Grid performances:**

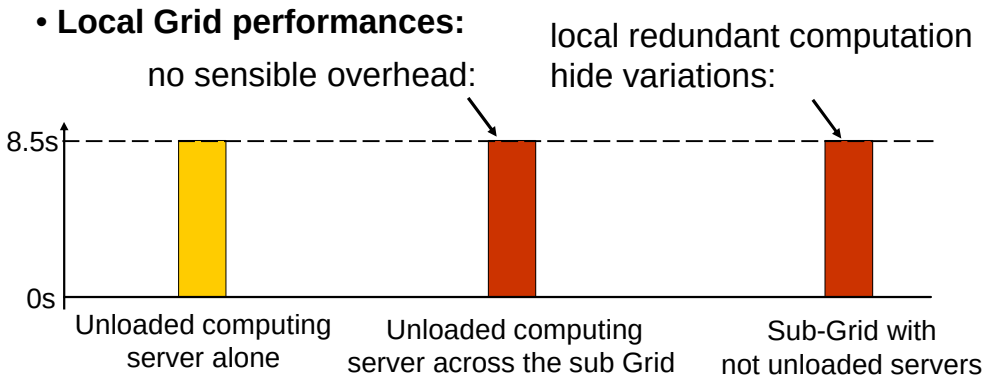

Phase 2

Performance measurement

Benchmark on 24h for localization operation across Internet:

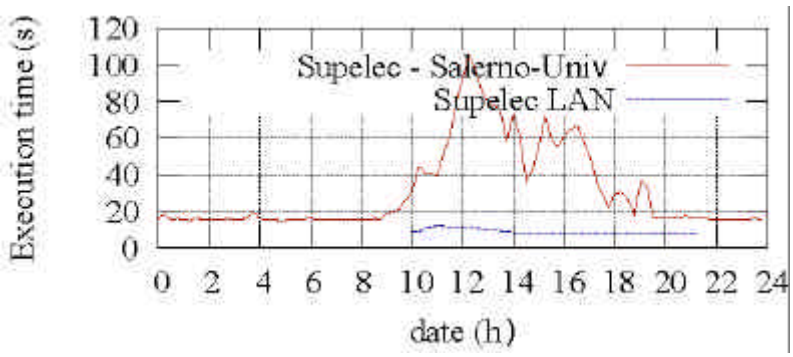

20h-9h:

- localization across Internet is OK
- slow down < 2
- regular execution time

} Usable for redundant computating to achieve fault tolerance …

Phase 2

Fault tolerance experiment

Running the complete application:

« Localization + navigation + lightness measurement »

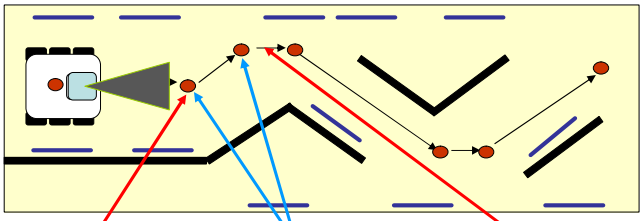

The faster localization service stops

The redundant localization service drives the camera

The faster localization service re-start

- Application don't stop, and go on.
- Slow down is limited to the parts using a slower service.

? Fault tolerance is achieved.

Phase 2

Fault tolerance experiment

Phase 2: main results

- **Design and deployment of a computing resource Grid:**
  - [Internet – VPN – Corba – DIET – API-RobGrid – Appli]
  - Low level service support concurrent and redundant calls
- **Design and implementation of a high-level API:**
  - "Easy-to-use" high-level API (RobGrid)
  - High-level Grid service definitions
  - Standard Grid service contains and actions (Grid semantic)
- **Experiment of autonomous robot control across internet:**
  - Overlapping communications, computations and mechanical moves
  - Fault tolerance achievement (slow-down but go on)

Phase 3 …

Scale the number of sites
Scale the number of processes to control

Phase 4 …

… Install on Globus

… to be continued !

A Grid for process control

Questions ?